Template structure and vowel length in a Berber secret language (*Tagnawt*)

Mohamed LAHROUCHI CNRS-Université Paris 8 mlahrouchi@univ-paris8.fr
Philippe SEGERAL Université Paris 7-CNRS philippe.segeral@linguist.jussieu.fr

[1] Schwa in Tashlhiyt Berber:

Epenthetic (Coleman, 1996, 1999, 2001) or transitional vocoids (Dell & Elmedlaoui 2002, Ridouane 2003)?

- Dell & Elemdlaoui (1985, 2002) argues that any segment, even a voiceless obstruent, may occur in the syllable nucleus in Tashlhiyt Berber. The short vowels that sometimes appear between consonants are mere transitional vocoids. (see also Ridouane 2003)
- Coleman (1996, 1999, 2001) argues that the so-called transitional vocoids in Dell&Elemdlaoui's analysis are actually epenthetic vowels that fill syllable nuclei that would otherwise be empty (*e.g.* akʌrkur *blackbird*, gɪnʲ *sleep*, jugʊl *he hung*)
- Our proposal is not concerned with the syllabic status of these short vowels. Rather, we focus on their phonological representation. We show that they are the straightforward result of the association of one of the uncontroversial full vowels i, a, u to one skeletal position.

[2] On the basis of Lowenstamm 1991 (Ethio-Semitic / Arabic) and Bendjaballah 2001 (Kabyle Berber), we assume that in Tashlhiyt Berber:

a. peripheral vowels are phonologically "long" (*i. e.* associated to two vocalic slots) (i.)

b. any vocalic Element associated to one skeletal position surfaces as [ə] or ø[1], depending on the phonotactic conditions (ii.)

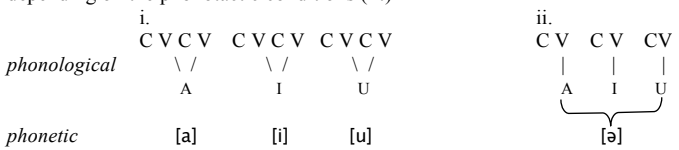

[3] Evidence in correspondences between Classical Arabic (CA) and Tashlhiyt Berber (TB):

CA	TB	
ʒaahada	ʒahd	*fight*
saafara	safr	*travel*
laaħaqa	laħg	*reach, pursue*
alkitaab	lktab	*the book*
albaħr	lbħr	*the sea*
tuffaaħ	ttffaħ	*apple*
ʕukkaaz	aʕkkaz	*crutch*

[4] *Tagnawt*: a secret language spoken by women in Tashlhiyt Berber. Data from Douchaïna 1998[2] [gloses in English ours]:

[1] A lexically empty V position surfaces too as [ə] or ø under the same conditions.

1	i-ga	ajggatwatti	*he is*	31	ʒgugl	ajʒʒagʷlwagʷl	*swing*
2	i-fl	ajffalwalli	*he let*	32	rfufn	ajrrafnwafn	*struggle*
3	iksudʕ	ajkkasdʕwasdʕ	*be afraid*	33	ggrml	ajggərmlwaml	*be crusty*
4	ili	ajttalwalli	*be*	34	ħħntzʕ	ajħħəntzʕwatzʕ	*kick out*
5	ssu	ajssatwatti	*spread*	35	mmuʃtllu	ajmmaʃtwaʃt	*be improductive*
6	kk	ajkkatwatti	*pass by*	36	ffrttl	ajffattrwattr	*escape*
7	lal	ajllalwalli	*be born*	37	smmʃʃtl	ajmmaʃʃtwaʃʃt	*dwadle*
8	ggʷ	ajggʷawwawwi	*wash*	38	wwnzr	ajwwanzwanz	*bleed (nose)*
9	sala	ajssalwalli	*be involved*	39	gʒdr	ajggaʒdwaʒd	*moan*
10	su	ajssawwawwi	*drink*	40	kruʃʃm	ajkkʷaʃʃmwaʃʃm	*be numb with cold*
11	amzʕ	ajttamzʕwamzʕ	*take*	41	gruʒʒm	ajggʷaʒmwaʒm	*be badly cooked*
12	azzl	ajttazzlwazzl	*run*	42	ggrnunnz	ajggannzwannz	*have raging toothache*
13	bbi	ajbbatwatti	*cut*	43	llʃtutm	ajlləʃtmwatm	*crawl, creep*
14	ffi	ajffatwatti	*pour*	44	imzʕij	ajmmazʕwazʕzʕi	*be small*
15	zuzzr	ajzzazzrwazzr	*wear out*	45	anf	ajttanfwanf	*avoid*
16	kakl	ajkkaklwakl	*pursue*	46	nfi	ajnnafwaffi	*shelter*
17	flufu	ajffalwalf	*boil*	47	adʕn	ajttadʕnwadʕn	*be sick*
18	sllil	ajssalwalli	*whiten*	48	dʕni	ajdʕdʕanwanni	*be fat*
19	klulu	ajkkʷalwalli	*be dazzled*	49	kl	ajkkalwalli	*spend the day*
20	bbrʕbrʕ	ajbbabrʕwabrʕ	*makes sounds as it cooks*	50	fl	ajffalwalli	*let*
21	ffrfr	ajffafrwafr	*flap (wings)*	51	zri	ajzzarwarri	*cross*
22	ħijjil	ajħħalwalli	*get ready for sth*	52	ddu	ajddadwaddi	*go*
23	izʕduj	ajzʕzʕadwaddi	*be heavy*	53	ʃʃ	ajʃʃatwatti	*eat*
24	fruri	ajffarwarri	*pick grapes off*	54	akʷr	ajttakʷrwakʷr	*steel*
25	isliw	ajssalwalli	*wilt*	55	sawl	ajssawlwawl	*speak*
26	izwir	ajzzawrwawr	*precede*	56	kkʷrkʷʃ	ajkkʷərkʷʃwakʷʃ	*make a slight noise*
27	wwarg	ajwwargwarg	*dream*	57	kknkr	ajkkənkrwakr	*be rough*
28	skr	ajssakrwakr	*do*	58	ffrfdʕ	ajffərfdʕwafdʕ	*fidget*
29	mdʕuru	ajmmadʕrwadʕr	*feel better*	59	ħlulli	ajħħalwalli	*fall*
30	nqqb	ajnnaqqbwaqb	*make a hole in*	60	ʕlulu	ajʕʕalwalli	*swing*

[5] Triconsonantal formations:

3	iksudʕ	ajkkasdʕwasdʕ

Derivation of *Tagnawt* from TB (informal description):

a. delete affixes and vowels = keep only root consonants
b. insert aj- (prefixed) and -wa- (infixed)
c. geminate R_1
d. reduplicate R_2 and R_3
e. vocalize the form invariably in a

3	iksudʕ	ajkkasdʕwasdʕ	*be afraid*
15	zuzzr	ajzzazzrwazzr	*wear out*
16	kakl	ajkkaklwakl	*pursue*
17	flufu	ajffalwalf	*boil*
26	izwir	ajzzawrwawr	*precede*
27	wwarg	ajwwargwarg	*dream*
28	skr	ajssakrwakr	*do*
29	mdʕuru	ajmmadʕrwadʕr	*feel better*
30	nqqb	ajnnaqqbwaqqb	*make a hole in*
31	ʒgugl	ajʒʒagʷlwagʷl	*swing*
32	rfufn	ajrrafnwafn	*struggle*
55	sawl	ajssawlwawl	*speak*

[2] We correct in [4] five forms given in Douchaïna 98 in which some typographic mistakes probably occur, namely n°34: ħħntzʕ > ajħħəntzʕwatzʕ instead of ajħħətzʕwatzʕ (D98: 203); n°56: kkʷrkʷʃ > ajkkʷərkʷʃwakʷʃ instead of ajkkfnkrwakr (D98: 208); n°57: kknkr > ajkkənkrwakr instead of ajkkfnkrwakr (D98: 208).

[6] Underlying glides:

a. R_3 = **j** - reduplicated /j/ surfaces as [i]
- non-realization of j before w (of infixed -wa-)
- reduplicated R_2 is geminated

23	izˤduj	ajzˤzˤadwaddi	*be heavy*
24	fruri	ajffarwarri	*pick grapes off*
44	imzˤij	ajmmazˤwazˤzˤi	*be small*
46	nfi	ajnnafwaffi	*shelter*
48	dˤni	ajdˤdˤanwanni	*be fat*
51	zri	ajzzarwarri	*cross*
59	ħlulli	ajħħalwalli	*fall*

b. R_3 = **w** - w > **j** (and then proceed as in a.)

25	isliw	ajssalwalli	*wilt*

c. R_2 = **j** - metathesis: **j** R_3 —> R_3 **j** (and then proceed as in a.)

22	ħijjil	ajħħalwalli	*get ready for sth*

[7] Template:

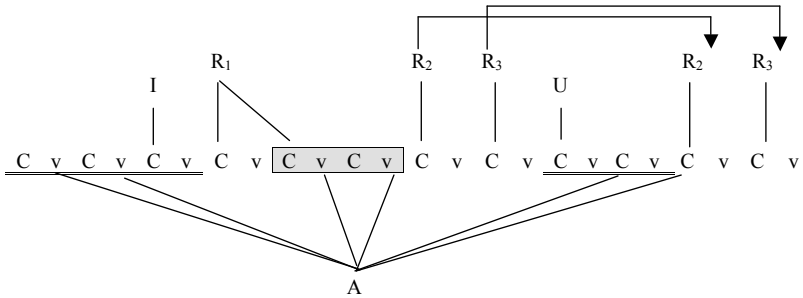

[8] Biconsonantal formations:

2	i-fl	ajffalwalli

a. epenthesis of **j** as a third radical: R_1 R_2 Ø —> R_1 R_2 **j**

2	i-fl	ajffalwalli	*he let*
7	lal	ajllalwalli	*be born*
9	sala	ajssalwalli	*be involved*
18	sllil	ajssalwalli	*whiten*
19	klulu	ajkkʷalwalli	*be dazzled*
49	kl	ajkkalwalli	*spend the day*
50	fl	ajffalwalli	*let*
60	ʃlulu	ajʃʃalwalli	*swing*

R_2 = w

10	su	ajssawwawwi	*drink*

b. epenthesis of **t** as a first radical: Ø R_2 R_3 —> **t** R_2 R_3

4	ili	ajttalwalli	*be*
11	amzˤ	ajttamzˤwamzˤ	*take*
12	azzl	ajttazzlwazzl	*run*
45	anf	ajttanfwanf	*avoid*
47	adˤn	ajttadˤnwadˤn	*be sick*
54	akʷr	ajttakʷrwakʷr	*steel*

[9] Template: the same as in [7]

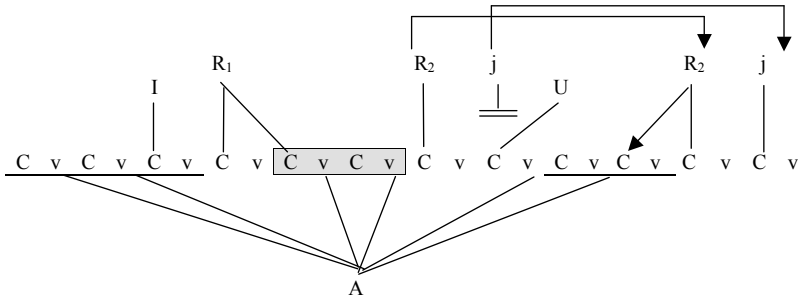

[10] Gemination of R_2 in case of R_3 = j (lexical or epenthetic): induced by the non-realization of the glide j before w (*cf.* [6])

=> a. the template is invariant
b. the template must be filled

[11] Monoconsonantal formations:

1	i-ga	ajggatwatti

Epenthesis of **t** as a second radical and **j** as a third radical: R_1 Ø Ø —> R_1 **t j**

1	i-ga	ajggatwatti	*he is*
5	ssu	ajssatwatti	*spread*
6	kk	ajkkatwatti	*pass by*
8	ggʷ	ajggʷawwawwi	*wash*
13	bbi	ajbbatwatti	*cut*
14	ffi	ajffatwatti	*pour*
52	ddu	ajddadwaddi	*go*
53	ʃʃ	ajʃʃatwatti	*eat*

[12] Template: the same as in [7]

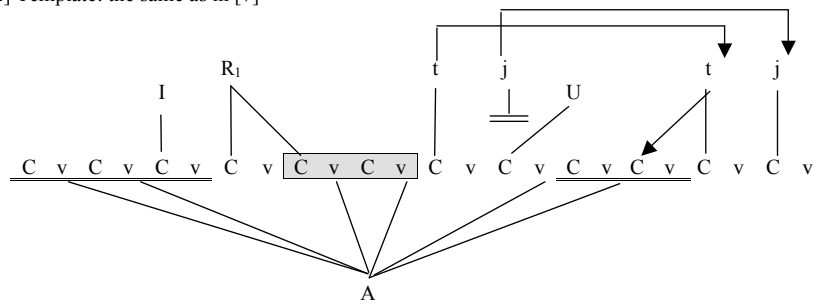

[13] Quadriconsonantal formations:

39	gʒdr	ajggaʒdwaʒd

a. one root consonant is dropped:

i. R_4: R_1 R_2 R_3 R_4 —> R_1 R_2 R_3 ~~R_4~~ (R_4 = l / r)

35	mmuʃtllu	ajmmaʃtwaʃt	*be improductive*
36	ffrttl	ajffattrwattr	*escape*
37	smmʃʃtl	ajmmaʃʃtwaʃʃt	*dwadle*

38	wwnzr	ajwwanzwanz	*bleed (nose)*
39	gʒdr	ajggaʒdwaʒd	*moan*

ii. R_2: R_1 R_2 R_3 R_4 —> R_1 $\cancel{R_2}$ R_3 R_4 (R_2 = r / rˤ)

20	bbrˤbrˤ	ajbbabrˤwabrˤ	*makes sounds as it cooks*
21	ffrfr	ajffafrwafr	*flap (wings)*
40	kruʃʃm	ajkkʷaʃʃmwaʃʃm	*be numb with cold*
41	gruʒʒm	ajggʷaʒmwaʒm	*be badly cooked*
42	ggrnunnz	ajggannzwannz	*have raging toothache*

b. => template: the same as in [7]

[14] Quadriconsonantals that remain quadriconsonantals in *Tagnawt*:

33	ggrml	ajggərmlwaml	*be crusty*
34	ħhntzˤ	ajħħəntzˤwatzˤ	*kick out*
43	llʃtutm	ajlləʃtmwatm	*crawl, creep*
56	kkʷrkʷʃ	ajkkʷərkʷʃwakʷʃ	*make a slight noise*
57	kknkr	ajkkənkrwakr	*be rough*
58	ffrfdˤ	ajffərfdˤwafdˤ	*fidget*

[15] One crucial observation: forms in [14] are the only forms of the whole set of examples in [4] that display [ə] to the right of the geminated R_1. All other forms invariably display a.

[16] Interpretation:

a. the template is NOT different: *Tagnawt* forms are all built upon the same template (the same analysis holds for another feminine secret language in TB, *Taqjmit*, see Lahrouchi & Ségéral, to appear)

b. => the realization of A as [ə] in *Tagnawt* quadriconsonantal formations results from the maintained association of R_2 to the template: the Element A that is associated to one skeletal slot can no longer surface as [a] but, according to [2b], as [ə]:

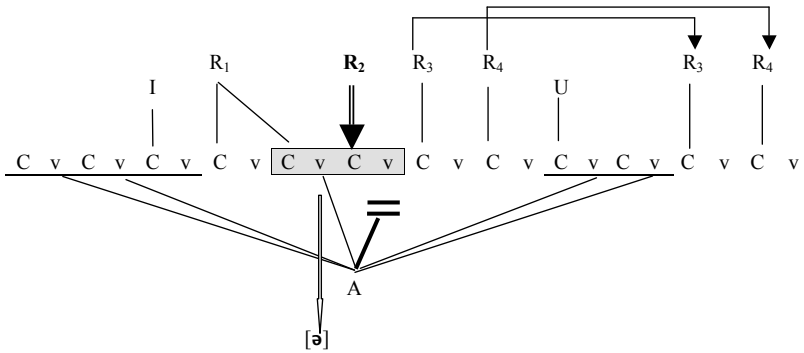

[17] Appendix:

a. some minor phonological points:

i. assimilation of epenthetic t when R_1 = d (d *t* j —> d *d* j) (D98:207)?

52	ddu	ajddadwaddi	*go*

i. labio-velars:

• K L u —> K^w (L) :

19	klulu	ajkkʷalwalli	*be dazzled*
40	kruʃʃm	ajkkʷaʃʃmwaʃʃm	*be numb with cold*
41	gruʒʒm	ajggʷaʒmwaʒm	*be badly cooked*

• K u K —> K^w

31	ʒgugl	ajʒʒagʷlwagʷl	*swing*

ii. liquids: l > r in n°36 rather than metathesis? (Douchaïna fn.16 p. 209):

36	ffrttl	ajffattrwattr	*escape*

b. One question:

conservation of the geminated R_2:

12	azzl	ajttazzlwazzl	*run*
15	zuzzr	ajzzazzrwazzr	*wear out*
30	nqqb	ajnnaqqbwaqqb	*make a hole in*
36	ffrttl	ajffattrwattr	*escape*
37	smmʃʃtl	ajmmaʃʃtwaʃʃt	*dwadle*
40	kruʃʃm	ajkkʷaʃʃmwaʃʃm	*be numb with cold*

but,

41	gruʒʒm	ajggʷaʒmwaʒm	*be badly cooked*
22	ħijjil	ajħħalwalli	*get ready for sth*

and

42	ggrnunnz	ajggannzwannz	*have raging toothache*

References:

Bendjaballah, S. 2001. The Negative Preterit in Kabyle Berber. *Folia Linguistica* 34,3-4 : 185-223.

Coleman, J. S. 1996. Declarative Syllabification in Tashlhit Berber. In J. Durand & B. Laks (eds) : *Current Trends in Phonology : Models and Methods*. Vol. 1 : 177-218. Salford : European Stufies Research Institute, University of Salford.

Coleman, J. S. 1999. The Nature of Vocoids Associated with Syllabic Consonants in Tashlhiyt Berber. In J. J. Ohala, Y. Hasegawa, M. Ohala, D. Granville and A. C. Bailey, eds. *Proceedings of The XIVth International Congress of Phonetic Sciences*. Vol. 1. 735-8

Coleman, J. S. 2001. The phonetics and phonology of Tashlhiyt Berber syllabic consonants. *Transactions of the Philological Society* 99**,** 29-64.

Dell, F. & Elmedlaoui, M. 1985. Syllabic consonants and syllabification in Imdlawn Tashlhiyt Berber. *Journal of African Languages and Linguistics* 10: 1-17.

Dell, F. & Elmedlaoui, M. 2002. *Syllables in Tashlhiyt Berber and in Moroccan Arabic*. Kluwer Academic Publishers: Dordrecht.

Douchaïna, R. 1998. La morphologie du verbe en tagnawt. *Etudes et documents berbères* 15-16: 197-210.

Lahrouchi, M. & Ph. Ségéral (to appear). Morphologie gabaritique et apophonie dans un langage secret féminin (*taqjmit*) en berbère tachelhit. *Revue Canadienne de Linguistique*.

Lowenstamm, J. 1991. Vocalic length and centralization in two branches of Semitic. In *Semitic Studies in Honor of Wolf Leslau on the Occasion of his 85th Birthday* (2 vol.), A. S. Kaye (ed.) : II-949-965. Wiesbaden : Otto Harrassowitz.

Ridouane, R. 2003. *Suites de consonnes en berbère chleuh: phonétique et phonologie*. Thèse de Doctorat, Université Paris III.